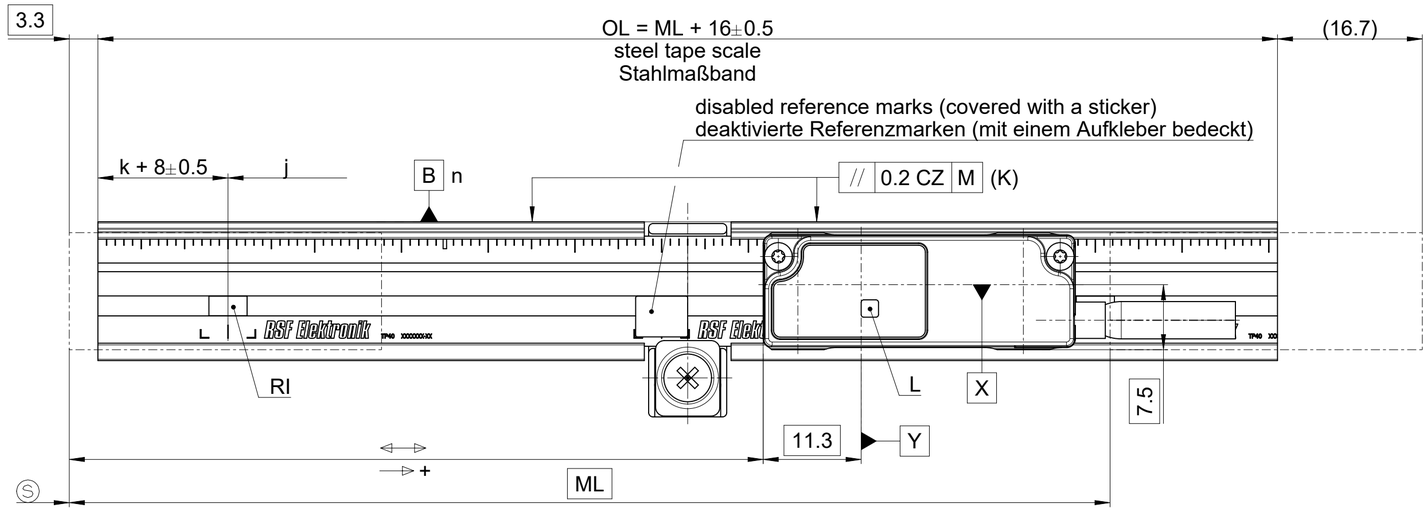

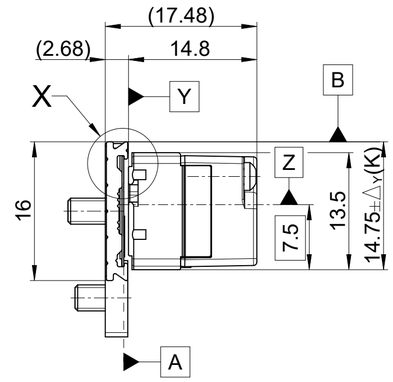

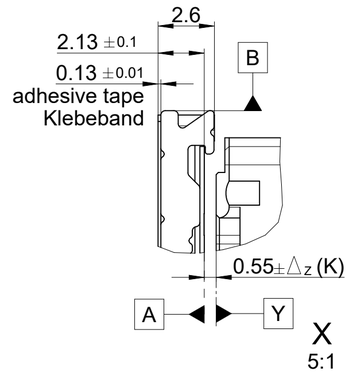

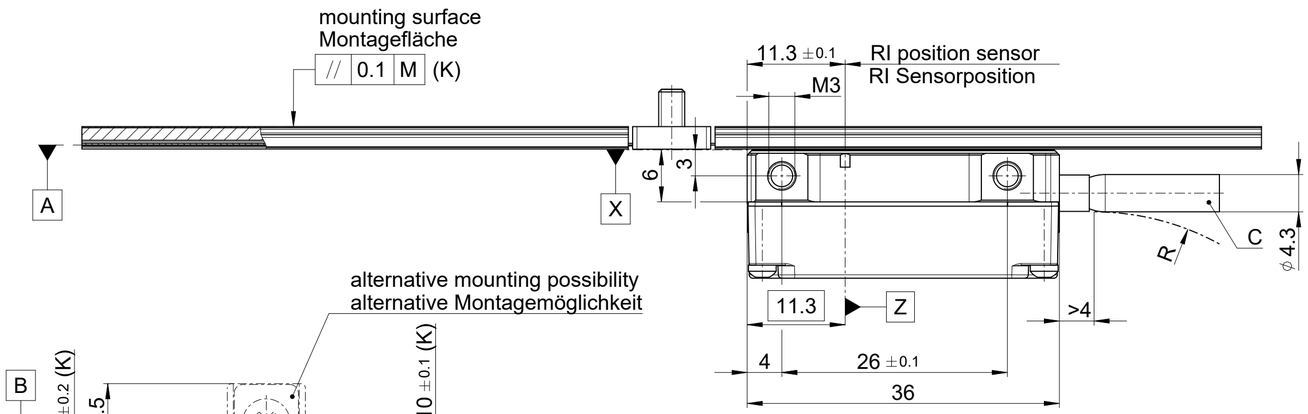

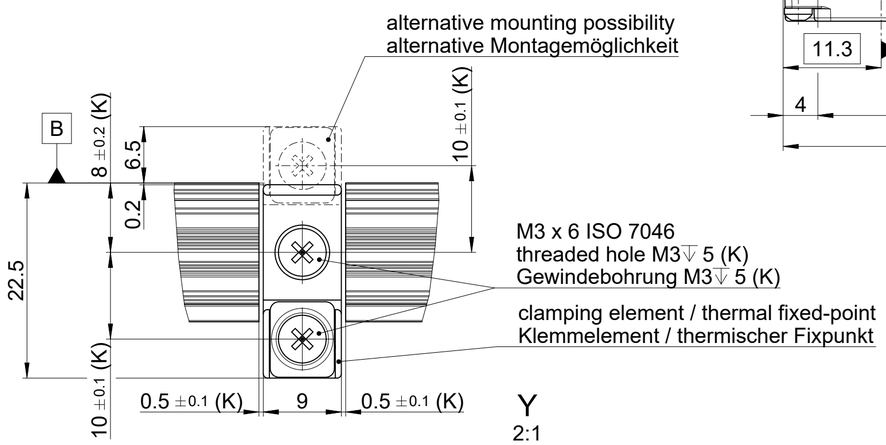

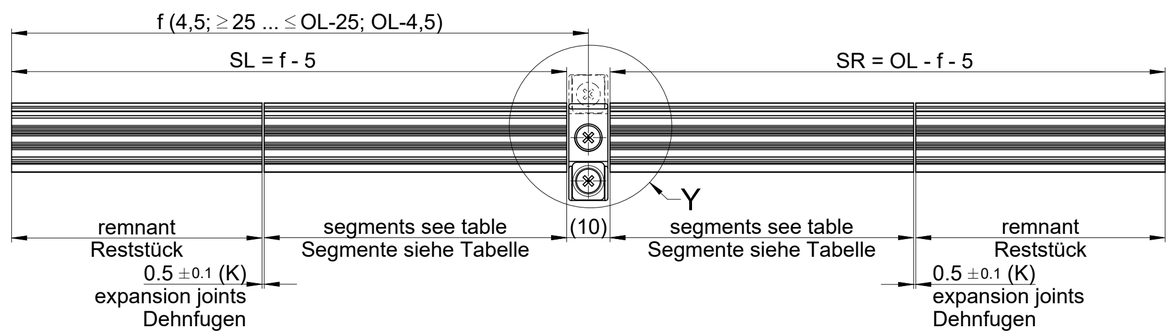

SL, SR = segment length / Segmentlänge
≥ 20 ... ≤ 1000 = 1x remnant / Reststück (≥ 20 ... ≤ 1000)
>1000 ... ≤ 1500 = 1x 499,5 + 1x remnant / Reststück (>500 ... ≤ 1000)
>1500 ... ≤ 2000 = 1x 999,5 + 1x remnant / Reststück (>500 ... ≤ 1000)
>2000 ... ≤ 2500 = 1x 499,5 + 1x 999,5 + 1x remnant / Reststück (>500 ... ≤ 1000)
>2500 ... ≤ 3000 = 2x 999,5 + 1x remnant / Reststück (>500 ... ≤ 1000)
>3000 ... ≤ 3500 = 1x 499,5 + 2x 999,5 + 1x remnant / Reststück (>500 ... ≤ 1000)
etc.

M = machine guideway / Maschinenführung
ML = measuring length / Messlänge
OL = overall length / Gesamtlänge
⇹ = 0 ... ML
→ + = direction of motion of the scanning head for ascending position values
Bewegungsrichtung des Abtastkopfes für steigende Positionswerte
Ⓢ = beginning of the measuring length ML / Beginn der Messlänge ML
RI = reference mark(s) / Referenzmarke(n)
k = any position of the selected reference mark starting from the beginning of the ML
beliebige Position der ausgewählten Referenzmarke vom Beginn der ML
j = additional reference marks selectable every 50mm (optional every 200mm, 400mm, ...)
zusätzliche Referenzmarken alle 50mm auswählbar (optional alle 200mm, 400mm, ...)
f = OL/2 (Standard)
any position of the clamping element (optional)
beliebige Position des Klemmelements (optional)
C = cable / Anschlusskabel
(K) = required mating dimensions / kundenseitige Anschlussmaße
L = LED function control / LED Funktionskontrolle
R = bending radius / Biegeradius stat. R ≥ 8mm, dyn. R ≥ 20mm
n = 1,2,3,... (number of segments / Anzahl der Segmente)

Permissible position deviation scanning head - tape scale | A | B |
Zulässige Lageabweichungen Abtastkopf - Maßband | A | B |
$\triangle_Z$ = ± 0.2mm (gap / Abstand)
$\triangle_Y$ = ± 0.5mm (lateral / Verschiebung)
φ_Z = ± 1.00mrad or / oder ± 0.06° (yaw angle / Gierwinkel)
φ_Y = ± 3.50mrad or / oder ± 0.20° (pitch angle / Nickwinkel)
φ_X = ± 4.00mrad or / oder ± 0.23° (roll angle / Rollwinkel)

				ID number:
				Change No. C164921-16
				Phase: ~~Nicht Serie~~
Original drawing	Scale	Format	MS14 MP MS14 MP Anschlussmaße / Mating Dimensions	Tolerances as per ISO 8015
Dimensions in mm	2:1	A2		General Tolerances ISO 2768:1989-mH ≤ 6:±0.2

The reproduction, distribution and utilization of this document as well as the communication of its contents to others without express authorization is prohibited. Offenders will be held liable for the payment of damages. All rights reserved in the event of the grant of a patent, utility model or design. (ISO 16016)

RSF Elektronik
www.rsf.at

Released	Version	Revision	Sheet	Page
13.05.2024	D1436713-00-C-01			1 of 1
	Document number			

1 213 928 A2