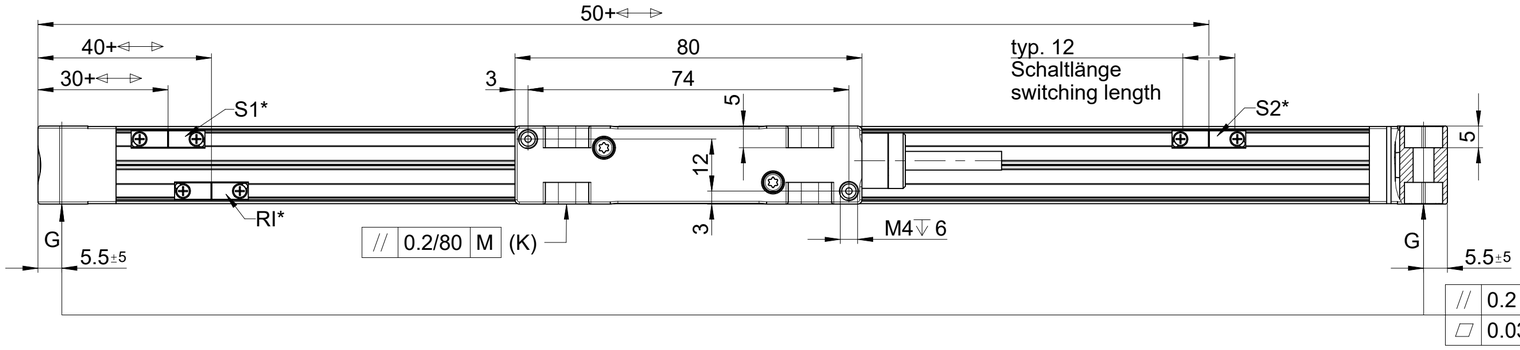

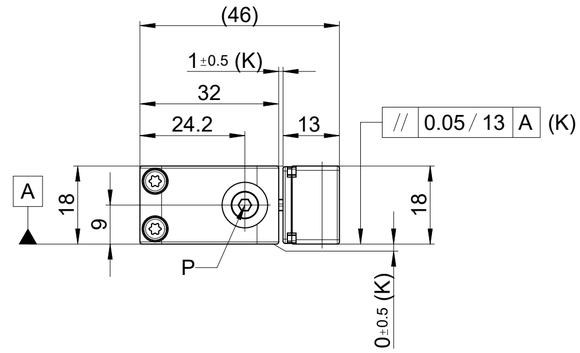

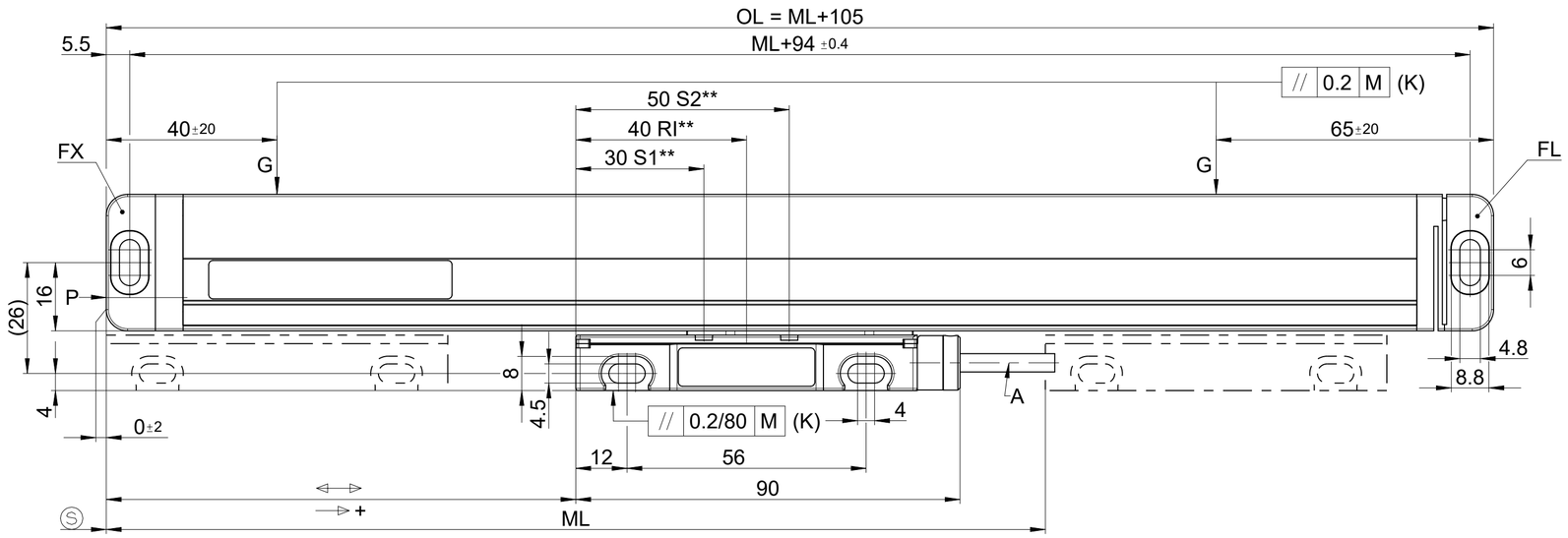

M = machine guideway / Maschinenführung
ML = measuring length / Messlänge
OL = overall length / Gesamtlänge
Ⓢ = beginning of the measuring length / Beginn der Messlänge
⟷ = 0 ... ML
→ + = direction of motion of the scanning unit for ascending position values
Bewegungsrichtung des Abtastkopfes für steigende Positionswerte

K = customer mounting dimensions / kundenseitige Anschlussmaße

optional / Optionen
P = M5 air inlet / M5 Luftanschluss
S1, S2 = switch signals / Schaltsignale
RI = selectable reference mark / wählbare Referenzmarke
A = connecting cable / Anschlusskabel
* = actuator magnet / Schaltmagnet
** = sensor position / Sensorposition

FX = fixed mounting / festes Befestigungselement
FL = flexible mounting / flexibles Befestigungselement

1 213 928 A2

			ID number: -	
			Change No. C157360-16	
			Phase: Serie	
Original drawing	Scale	Format	MSA710	Tolerances as per ISO 8015
Dimensions in mm	1:1	A2	MSA710 Anschlussmaße / Mating Dimensions	General Tolerances ISO 2768:1989-mH ≤ 6:±0.2

The reproduction, distribution and utilization of this document as well as the communication of its contents to others without express authorization is prohibited. Offenders will be held liable for the payment of damages. All rights reserved in the event of the grant of a patent, utility model or design. (ISO 16016)

RSF Elektronik
www.rsf.at

Released	Version	Revision	Sheet	Page
23.11.2023	D 679205-01-C-01			1 of 1
	Document number			